AN OVERVIEW OF THE LHC TRANSVERSE DIAGNOSTICS SYSTEMS

M. Gasior, A. Boccardi, R. Jones, R.J. Steinhagen, CERN, Geneva, Switzerland

Abstract

The unprecedented intensity and energy of the LHC proton beams will require an excellent control of the transverse beam dynamics in order to limit particle loss in the superconducting systems. Due to restricted tolerances of the machine protection system and a tight beam emittance blow-up budget only small beam excitation is allowed, making precise measurements of the transverse beam parameters very challenging. This overview outlines the systems measuring the tune, chromaticity and betatron coupling of the LHC beams, referred to in the paper as the transverse diagnostic systems. As manual correction of the parameters may reach its limit with respect to required precision and expected time scales, the LHC is the first proton collider that can be safely and reliably operated only with automatic feedback systems for controlling transverse beam dynamics. An outline of these feedback systems is also presented.

INTRODUCTION

During nominal operation the LHC has a stored beam energy of about 350 MJ per beam circulating inside a cryogenic environment, which tolerates energy depositions in the order of only a few mJ/cm³. This requires an excellent control of particle loss, which for the LHC is provided by its Machine Protection and Beam Cleaning System [1-3]. The function of these systems depends critically on the stability of orbit, energy, tune (Q), chromaticity (Q') and betatron coupling (C^-), and imposes significant constraints on the maximum allowed beam excursions, traditionally required to measure Q and Q'. The transverse oscillation 'budget', which at nominal is below a few tens of μm, must be shared between several accelerator systems, such as the orbit and energy feedback, the Q phase-locked loop (PLL) and the bunch-by-bunch transverse damper feedback. As a result, the amplitudes of the explicit beam oscillations used by the transverse diagnostic systems for nominal beam operation are limited to a few μm. The non-zero dispersion at the collimator locations and available RF power relates this to an effective limit in the order of 10^{-5} on the maximum allowed momentum modulation Δp/p, with a maximum modulation frequency of about 5 Hz.

Due to persistent currents, the related decay and snap-back phenomena (inherent to superconducting magnets) and other perturbation sources, the induced changes in Q, Q' and C^- will exceed LHC beam stability requirements by orders of magnitude, as summarized in Table 1. Assuming that a large part of these perturbations are reproducible from fill-to-fill, these effects may be partially compensated by feed-forward systems. However, due to the intrinsic uncertainties related to the mentioned processes and the tight tolerances requested on Q, Q' and C^-, beam-based measurements and their exploitation in automated feedback systems will be mandatory for a safe and reliable LHC operation.

The nominal requirements of the LHC transverse diagnostic systems can be summarized as follows:

- sensitivity, allowing operation with excitation amplitudes in the 1 μm range for the rms beam sizes about 0.2-1 mm;
- resolution and measurement speed;
- robustness, required to reliably operate automatic feedback systems under varying beam conditions.

This overview focuses on the measurement and control of Q, as both Q' and C^- are usually derived from it. While C^- can be calculated using cross-amplitude terms of the tune eigenmode oscillations [4, 5], the base-line LHC Q' measurement employs the classic method, based on tracking the Q' dependent tune changes ΔQ as a function of momentum modulation Δp/p. The underlying relation, also defining the unit of Q', is given by

$$\Delta Q = Q' \frac{\Delta p}{p}$$

Table 1. Parameters and requirements of the LHC transverse diagnostic systems [6].

Parameter	Tune [f_{rev}]	Chromaticity [Q']	Coupling [C^-]
Nominal value	0.31, 0.32	2	< 0.001
Nominal stability	< 0.001	±1	< 0.001
Perturbations	0.14	70	0.01
Worst-case perturb.	0.18	300	0.1
Max drift per sec.	< 0.001	1.3	–

TUNE MEASUREMENT

The biggest challenge in measuring tunes of high intensity beams is the dynamic range of the processed signals, as the small signal related to transverse beam oscillations is carried by large, short pulses. For example, the nominal 1 ns long LHC bunches induce some 50 V on the 40 cm electrodes of the Q measurement stripline pick-ups. For the 80 mm pick-up diameter and 1 μm beam oscillation amplitudes the modulation of the pick-up output pulses is in the order of 10^{-5}, i.e. a few mV. An efficient way to filter out the betatron modulation signal from its inconvenient carrier is to use the Direct Diode Detection (3D) [7, 8]. The principle of this technique is shown in Fig. 1, with the simplified signal waveforms sketched above the corresponding circuit paths.

The pick-up electrode signals are processed by diode peak detectors, which can be considered as fast sample-and-hold circuits, with the sampling self-triggered at the bunch maxima and 'held' by the parallel capacitors. The purpose of the parallel resistors is to slightly discharge the capacitors so that the next bunch with a potentially smaller amplitude also contributes to the detector output signal.

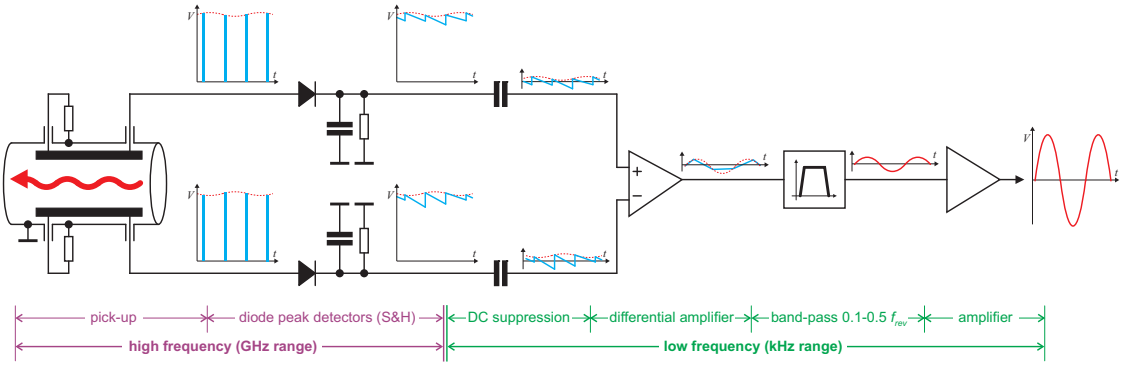

Figure 1: Direct diode detection principle with simplified signal shapes in the key nodes of the circuit.

Bunch sampling by the peak detectors at the bunch repetition rate down-converts the beam energy from a few GHz frequency range to the baseband. In the baseband in the kHz range the signals can be efficiently and cost-effectively processed by powerful audio-frequency components.

The 3D technique requires simple, low frequency and thus inexpensive electronics, and gives very high sensitivity for large beam signals, which could otherwise not be processed without prior attenuation or filtering. It does not require beam synchronous timing due to the intrinsic down-sampling property and can work with any position pick-up.

The 3D technique as described above yields an 'averaged' tune for all bunches, with those of dominating amplitudes contributing more than smaller ones. This can be improved with a preceding fast, large signal gate, selecting only bunches of interest, however, at the cost of potentially reduced sensitivity and increased system complexity. Such a solution is currently being studied.

The block diagram of the LHC tune and coupling measurement system, based on the 3D technique, is shown in Fig. 2. The 3D analogue front-end (AFE) signals are digitised at the revolution frequency rate of 11.2 kHz by 24-bit audio ADCs. Samples are subsequently send through an LVDS link to an LHC standard VME data acquisition card, which is also used for other LHC instrumentation systems. The acquisition card houses a large FPGA and memory, allowing an efficient, fast, real-time, turn-by-turn processing of the digital samples.

The tune measurement system can operate either using spectral analysis (FFT) or as a PLL system resonantly locked on the tune eigenmodes.

In the 'FFT' mode the FPGA calculates the fast Fourier transform of the ADC samples arranged in frames of length from 256 to 256K, prior to the application of one of the commonly used windowing functions. The FFT acquisition frames can be triggered to start at specified time intervals, at the end of the previous frame ('back-to-back' mode) or to overlap with adjacent frames by up to 50%, as all samples are double buffered. The internal FPGA processing is done with 32-bit precision, resulting in a 180 dB dynamic range of the calculated spectra [9].

The acquisition card is connected to a VME front-end computer, through which the user can continuously retrieve the real and imaginary parts of the FFT spectra, the power spectra and the original raw signal samples via a fast Ethernet link, using the CERN common middle ware communication protocols.

The FFT mode offers several types of measurement options. The system can operate with no explicit excitation relying on the residual beam oscillations ('passive' operation), with dedicated tune kickers or with fast frequency sweeps ('chirp' signals). The chirp signals are generated digitally inside the FPGA and converted into analogue signals by 24-bit DACs. To get sufficient resolution the trigonometric functions required for the windowing and chirp signal generation are calculated 'on-the-fly' in the FPGA. The DAC chirp signals are sent to the LHC transverse damper system which amplifies the signal and excites the beam through pairs of electrostatic deflection plates.

A typical FFT measurement example is shown in Fig. 3. The measurement has been done with the LHC prototype system installed in the CERN SPS using a chirp excitation in the vertical plane. For the 2007 start-up the prototype was adapted for regular SPS operation and has since been working as the primary SPS tune meter.

In the PLL mode the beam is sinusoidally excited at a small amplitude (typically less than a µm) through either the transverse damper or through a dedicated 1 m stripline kicker, which will be driven with a current of a few A. For the baseband excitation frequencies (around 3.5 kHz) the stripline electrodes will be short-circuited at one end to allow operation with low voltages (a few V), limiting power dissipation in the driving amplifier to some 20 W. The stripline will be RF terminated only for beam pulses at higher frequencies.

The PLL scheme is based on mixing the beam signals from the AFE with the sine and cosine components of the excitation signal. Then IIR low-pass filters are used to remove higher order mixing products. The remaining signals are treated by a rectangular-to-polar converter that separates the signal phase and amplitude, which can further be treated by two independent controllers. In comparison to classic phase detectors based on mixers, this scheme provides a twice the dynamic range for the

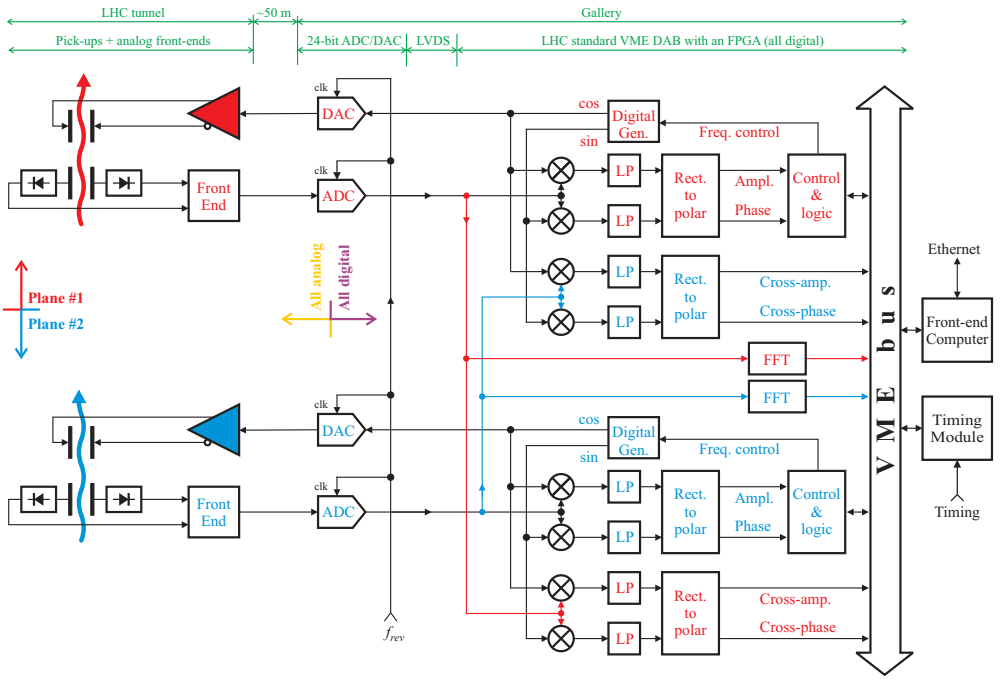

Figure 2: Block diagram of the LHC tune and coupling measurement system (two planes of one beam).

phase and a true decoupling from the amplitude, which proves to be advantageous in situations when the phase and amplitude change at the same time. The FPGA further compensates for other non-beam related contributions to the measured phase shift, such as constant lag due to data processing, cable transmission delays, filters in the AFE and the response of the beam exciter itself. Most of the controller parameters can be updated during operation for the optimum trade off between the required measurement resolution and tracking speed, depending on beam conditions.

The prototype LHC PLL system has been successfully tested at the SPS. Complementary studies have also been carried out at BNL RHIC in the framework of US-LARP activities [4, 10-14]. The RHIC PLL tune measurement system is based on the same 3D technique, with however different architecture.

The system in the PLL mode measures C^- by correlating the tune eigenmode signal in the excited plane with that of the response in the unexcited plane, i.e. horizontal tune in vertical plane and vice versa [5]. While the base-line for coupling measurement is the PLL, it has also been shown that the same C^- estimate can be equally derived using the chirp excitation, as shown in Fig. 3.

The LHC tunes will be measured by three independent operational systems per beam. While requiring only one system per beam, it is believed that this redundancy will provide an increased flexibility and thus reliability for LHC operation.

Of the three systems per beam, one is dedicated for passive beam spectra observation, ensuring a continuous data logging for post-mortem analysis, passive beam quality monitoring and fixed displays in the control room. While not being directly connected to a dedicated exciter, this passive system nevertheless observes any beam excitation introduced by the other systems connected to one of the excitation sources.

The second system is dedicated to tune PLL operation, with the excitation signals routed to either the dedicated stripline kickers or the transverse damper. The third system, connected to either the stripline kicker or damper, is intended for 'on-demand' tune measurement which may require frequent acquisition parameter configuration changes, temporary pausing or synchronization of the acquisition to other machine timing driven events (e.g. operation of the tune kickers).

An additional fourth system, dedicated for beam instrumentation and diagnostic development purposes, can replace any of the operational systems in case of hardware problems.

CHROMATICITY MESUREMENT

The base-line LHC chromaticity measurement is based on the classical momentum modulation method. Similarly to the tune tracking itself, the main Q' measurement constraints derive from the tight limits on the transverse beam position by the collimation and RF acceleration system, which reduces the usable momentum modulation to a few 10^{-5} with modulation frequencies of less than about 5 Hz. This puts very challenging demands on the resolution of the Q measurement, which must therefore also be of the same order. The feasibility of the Q' measurement with this unprecedented small momentum modulation has been demonstrated at the SPS in 2007. One such a measurement is shown in Fig. 4. The tune variations due to a peak momentum modulation of 1.8×10^{-5} and the reconstructed chromaticity are shown.

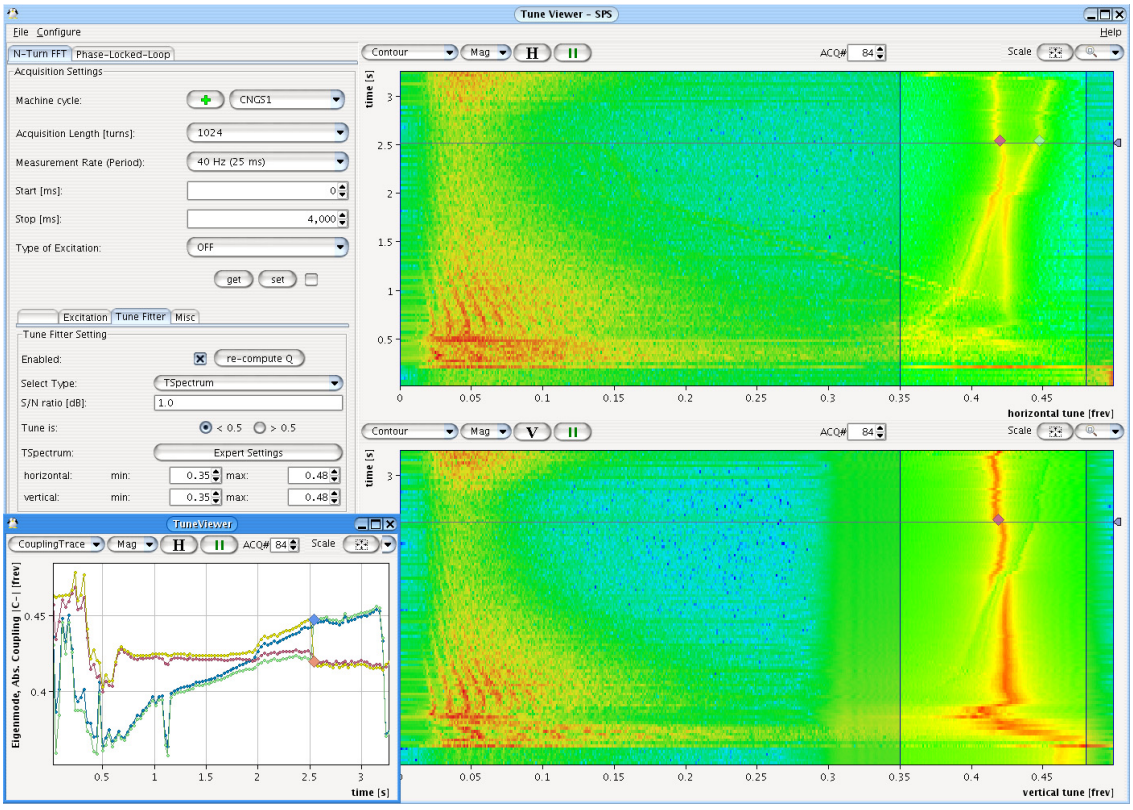

Figure 3: A typical SPS FFT measurement with vertical chirp excitation in presence of coupling. Measured and reconstructed unperturbed crossing tunes are shown on the plot in the left bottom corner. Synchrotron sidebands of the revolution frequency (down-converted to DC) can be seen at lower frequencies. The synchrotron frequency becomes small at the transition (around 0.5 s).

The achieved Q resolution was in the order of 10^{-6}, resulting in a chromaticity resolution of better than 1 unit. It was shown that the Q' tracking loop was able to operate up to chromaticity values of at least 36 units, which provides some margin for operation in a regime where a classic Q kicker based measurement using BPMs would fail due to very fast de-coherence times [15].

Attempts have been made to assess the information on chromaticity without an explicit momentum modulation, based on collective effects such as the head-tail phase shift [16, 17], decoherence time and related tune width, which can be exploited through additional side-exciters placed around the primary tune PLL exciting frequency [18]. All these methods have in common that they are also dependent on other effects, such as impedance, non-Q' related detuning with amplitude and other higher order effects that may drive non-linear particle motion. Nevertheless, provided that the relevant non-Q' beam parameters are small, these techniques could ultimately allow a direct measurement of Q' using the PLL system without the need for momentum modulation. This will, however, require further evaluation with LHC beams for acceptance in terms of robustness and reliability. Thus the base-line Q' measurement method is and will be based on the more established classic momentum modulation technique.

FEEDBACKS

Due to the tight beam parameter requirements and expected large perturbation sources, the LHC will be the first accelerator that requires continuous beam-based feedbacks for safe and reliable machine operation during nearly all operational phases. It is thus foreseen to deploy fully automated feedbacks on orbit, tune, chromaticity, coupling and beam energy. This paper concentrates on tune, chromaticity and coupling feedbacks, with the control of orbit and energy described in detail in [19].

The operation of multiple feedback loops acting on the same beam requires a proper addressing of cross-constraints, cross-talk and possible coupling between the loops already at the design stage. In the LHC two basic decoupling strategies are deployed:

- decoupling of beam parameters, e.g. orbit and energy (dispersion orbit), or tune and betatron coupling;
- separation of feedback bandwidths.

The foreseen nested LHC feedback control scheme is shown in Figure 5. The orbit and energy feedback are the inner-most loops surrounded by the tune PLL measuring and correcting the global tune and coupling parameters.

In order to minimize the cross-talk introduced between the chromaticity and orbit/energy feedback via the

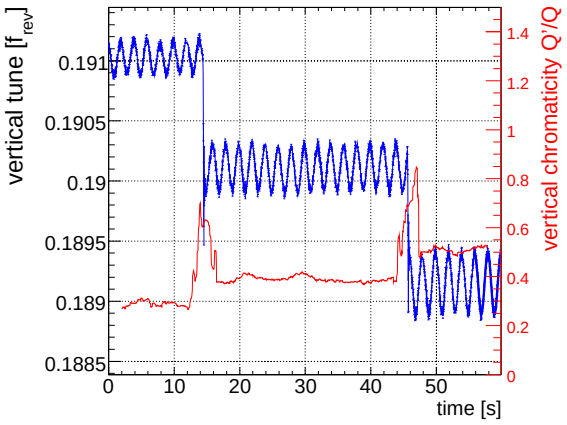

Figure 4: Q' measurement by momentum modulation.

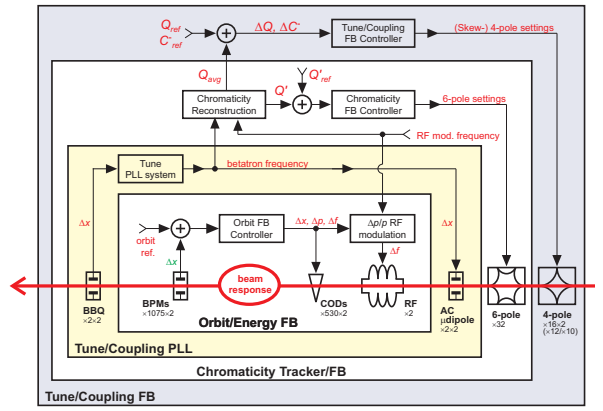

Figure 5: Block diagram of the LHC feedback systems.

dispersion orbit, the foreseen orbit/energy feedback filters and separates the dispersion orbit from the measured closed orbit prior to performing any orbit or energy correction (radial steering).

The Q tracking PLL is first nested within the tracking loop that measures and controls the chromaticity and is then surrounded by the actual Q feedback loop controlling the global tunes and coupling. The decoupling is obtained by choosing gradually reduced bandwidths for the Q tracking PLL ($f_c \approx 8$ Hz), chromaticity ($f_c \approx 1$ Hz) and tune feedback ($f_c < 1$ Hz). This nesting hierarchy is required in particular to eliminate the cross-talk between the Q and Q' feedback, as the tune feedback would otherwise minimize the momentum-driven modulation and thus compromise the chromaticity measurement.

An alternative scheme, to correct for the momentum-driven tune perturbations by the quadrupole and to derive the chromaticity through the quadrupole current modulations, has been tested at RHIC [13]. However, at the LHC these modulations would be too small and the knowledge on the quadrupole transfer function not sufficient in the targeted tune modulation regime to exploit this scheme.

CONCLUSIONS

The LHC will require a continuous, automatic control of orbit, tune, chromaticity, betatron coupling and energy for safe and reliable machine operation. The collimation and machine protection systems impose tight constraints on the allowed transverse beam oscillations, traditionally required to measure Q and Q'. These constraints have led to the development of the high sensitivity direct diode detection technique. Combining this detection technique with a tracking PLL and small momentum modulation has allowed all transverse beam parameters to be measured with unprecedented accuracy using minimal excitation. The performance of such systems has been shown to be compatible with nominal LHC requirements during regular operation and tests both at the CERN SPS and BNL RHIC. The LHC will therefore start-up with a comprehensive suite of instruments for the measurement and correction of the transverse beam parameters.

REFERENCES

[1] R. Assmann, "Collimation and Cleaning: Could this limit the LHC performance?", Proceedings of Chamonix XII, 2003.

[2] S. Redaelli, "LHC Aperture and Commissioning of the Collimation System", Proceedings of Chamonix XIV, 2005.

[3] V. Kain et al., "The Expected Performance of the LHC Injection Protection System", CERN LHC Project Report 746, 2004.

[4] P. Cameron et al., "Advances Towards the Measurement and Control of LHC Tune and Chromaticity", DIPAC'05.

[5] R. Jones et al., "Towards a Robust Phase Locked Loop Tune Feedback System", DIPAC'05.

[6] R. J. Steinhagen, "Real-time Feed-Forward/Feedback Required", Proceedings of Chamonix, 2006.

[7] M. Gasior, R. Jones, "The Principle and First Results of Betatron Tune Measurement by Direct Diode Detection", CERN LHC Project Report 853, 2005.

[8] M. Gasior, R. Jones, "High Sensitivity Tune Measurement by Direct Diode Detection", DIPAC'05.

[9] A. Boccardi et al., "The FPGA-based Continuous FFT Tune Measurement System for the LHC (…)", PAC'07.

[10] P. Cameron et al., "The Effects and Possible Origins of Mains Ripple in the Vicinity of the Betatron Spectrum", DIPAC'05.

[11] P. Cameron et al., "Summary of Coupling and Tune Feedback Results during RHIC Run 6, and Possible Implications for LHC Commissioning", EPAC 2006.

[12] P. Cameron et al., "Simultaneous tune and coupling feedback (…)", PRST 122801 (2006).

[13] P. Cameron et al., "Tune, Coupling, and Chromaticity Measurement and Feedback During RHIC Run 7", DIPAC'07.

[14] P. Cameron et al., "Progress in Tune, Coupling, and Chromaticity Measurement and Feedback during RHIC Run 7", PAC'07.

[15] R. J. Steinhagen et al., "Results of Continuous Chromaticity Measurements in the CERN-SPS (…)", EPAC'08, tbp.

[16] M. Sands, "The Head-Tail Effect: An Instability Mechanism in Storage Rings", SLAC-TN-69-008, 1969.

[17] R. Jones et al., "The Measurement of Chromaticity via Head-Tail Phase Shift", BIW'98.

[18] R. J. Steinhagen et al., "Influence of Varying Tune Width on the Robustness of the LHC Tune PLL (…)", PAC'07.

[19] R. J. Steinhagen, "LHC Beam Stability and Feedback Control – Orbit and Energy", CERN-AB-2007-049.